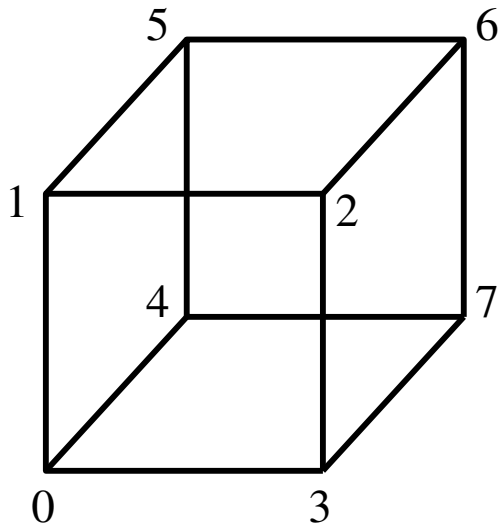
5
6
1
2
4
7
0
3

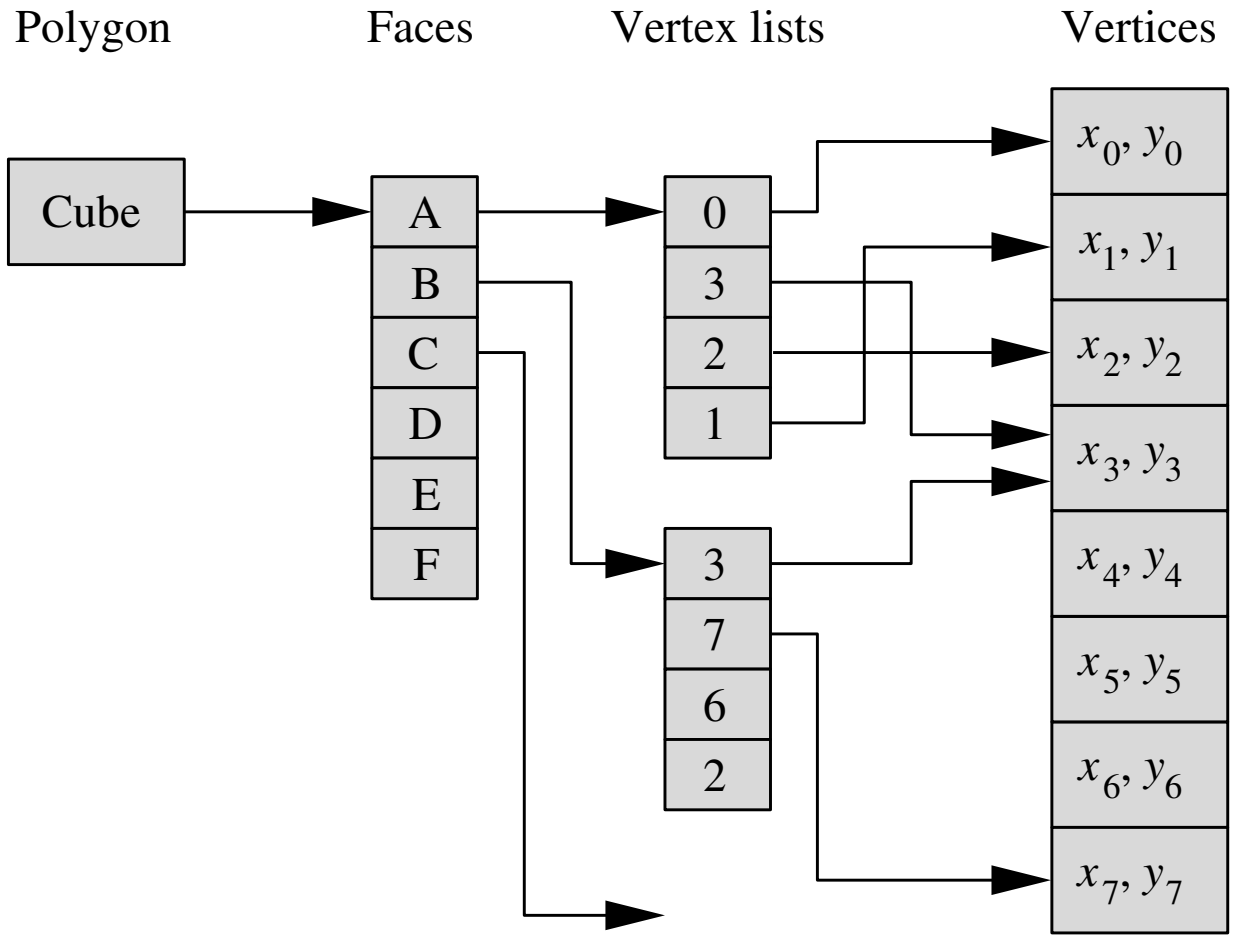
Polygon
Faces
Vertex lists
Vertices
Cube
A
B
C
D
E
F
0
3
2
1
3
7
6
2
x_0, y_0
x_1, y_1
x_2, y_2
x_3, y_3
x_4, y_4
x_5, y_5
x_6, y_6
x_7, y_7